ASSEMBLY GUIDE

168245-xxx-xx

Railing base

EASY GLASS® SMART Y CLADDING - adhesive tape mounting instructions

Q-INFO MOD 8245

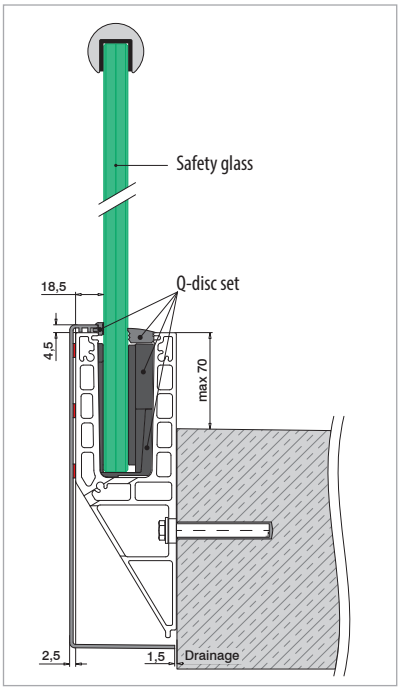

168245-xxx-**18**, follow installation steps starting at P3

Included
168245-xxx-xx

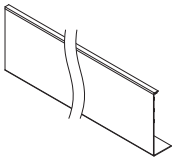

168245-xxx-**00**, follow installation steps starting at P1

Order additionally
201360 (= ± 33 mtr = ±11 mtr cladding)
Q-53

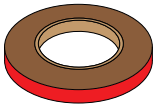

Please do any surface treatments before these preparations steps

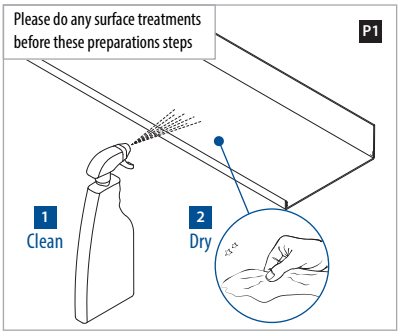

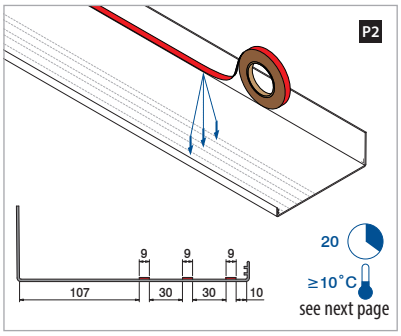

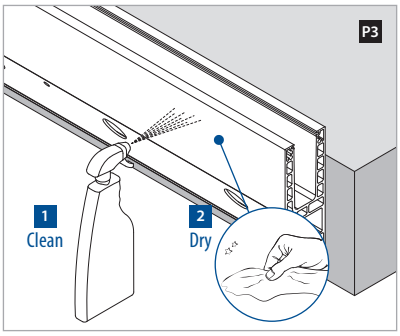

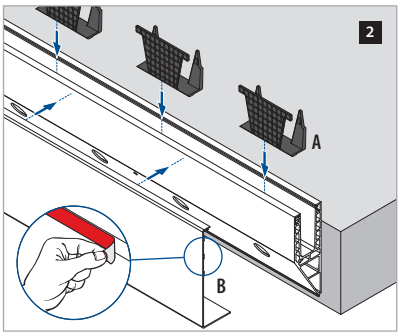

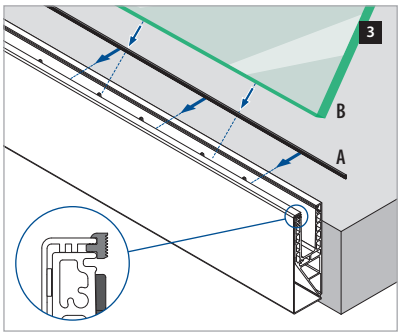

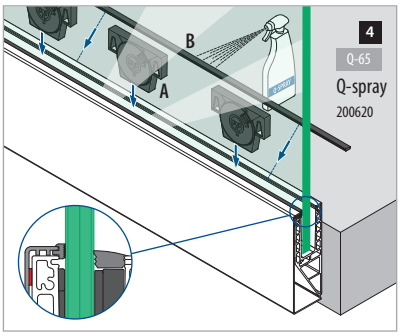

Railing base

EASY GLASS® SMART Y CLADDING - adhesive tape mounting instructions - Alternative mounting option

Q-INFO MOD 8245

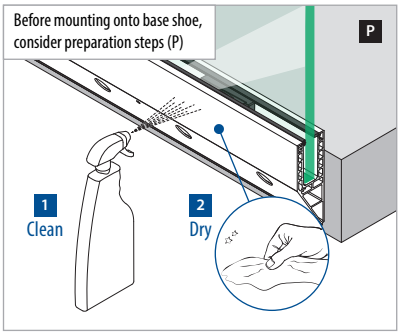

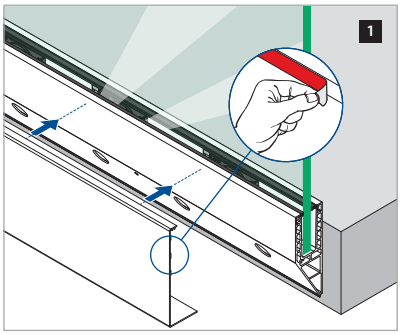

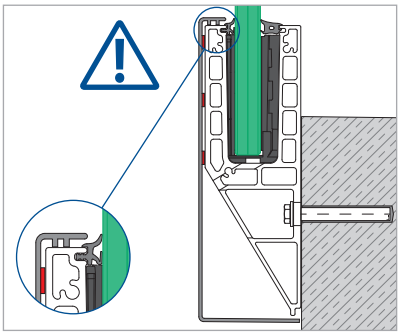

©2022 - Q-railing Europe GmbH & Co. KG - All rights reserved
www.q-railing.com

Please refer to the respective certificates for specifications such as mounting details, glass dimensions and glass type (laminated glass / monolithic glass).
www.q-railing.com/certificates

3M™ VHB™ - MOD 1360

Version: 05 / 2022

Applications

- For bonding high surface energy materials such as aluminium, steel, painted surfaces, painted wood, glass, ceramics and many plastics
- For indoor and outdoor use

Surface Preparation

- Ensure that surfaces to be bonded are well unified, clean, dry and free of grease and dust. Clean them with benzene or isopropyl alcohol (do not use moisturizing household cleaners)
- On glass surfaces, always use 3M Silane Glass Primer (follow the product's instructions for use)

Instructions for Use

- The recommended amount of tape per kg to be held is at least 60 cm² (4,2in²/lb)
- Best to apply at temperatures between 21°C and 38°C (between 70°F and 100°F), minimum application temperature: 10°C (50°F)
- Apply the tape and press on firmly (min. 2 kg/ cm²; min. 28lb/in²)
- Remove the liner and apply the second part to be bonded
- Do not touch the adhesive. Avoid trapped air pockets
- Position the tape carefully; it cannot be repositioned due to its high bonding strength.
- Apply pressure to the second part to be bonded (min. 2 kg/ cm²; min. 28lb/in²)

Final Strength

- The tape reaches its final strength after 72 hours at 20 °C (68°F). Do not apply loads before final strength has been achieved, and keep the parts to be bonded free of any loading during this time

Important

- Do not use on low surface energy materials such as PE, PP, PTFE, PA or on difficultto-bond surfaces such as rubber or silicone
- Overhead bonding is not recommended
- For further information, please refer to the technical bulletin for the particular product
- Temperature resistance: Short term (minutes, hours) 230°C (450°F);
  Long term (days, weeks) 150°C (300°F)

All statements, technical information and recommendations contained in this document are based upon tests or experience that 3M believes are reliable. However, many factors beyond 3M's control can affect the use and performance of a 3M product in a particular application, including the conditions under which the product is used and the time and environmental conditions in which the product is expected to perform. Since these factors are uniquely within the user's knowledge and control, it is essential that the user evaluate the 3M product to determine whether it is fit for a particular purpose and suitable for the user's method of application. Except where prohibited by law, 3M will not be liable for any loss or damage arising from the 3M product, whether direct, indirect, special, incidental or consequential, regardless of the legal theory asserted, including warranty, contract, negligence or strict liability.

©2022 - Q-railing Europe GmbH & Co. KG - All rights reserved
www.q-railing.com